6-Axis Robots
6 DOF Motion Platforms
Hexapod Positioning Systems

6-Axis Parallel Kinematics Robotics Positioning Systems

Controlling Motion with Sub-Micrometer Precision

The ALMA project in the Atacama desert in Chile is to include up to 64 antennas interconnected to form an enormous radio telescope. PI Hexapod systems are used to position the secondary reflectors in the antennas. The M-850K systems, specially designed for outdoor operation in hostile conditions, can position loads of up to 75 kg (photo: Vertex Antennentechnik GmbH)

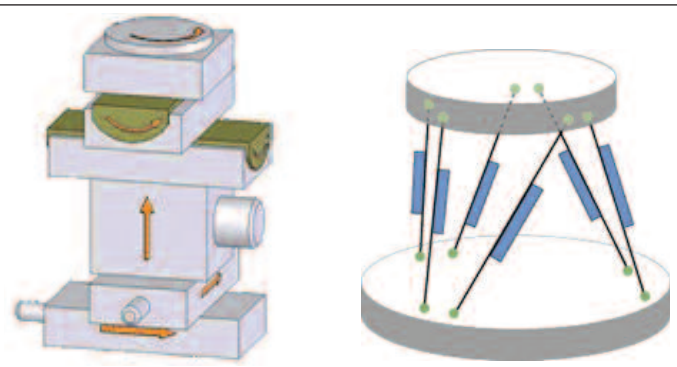

Stacked serial kinematics 6D system vs. Hexapod parallel kinematics system designs. Advantages such as compactness and minimized inertia (one platform for all six actuators) are easily seen. The reduced inertial mass makes for significantly faster response than with serial kinematics. Because there are no moving cables to cause friction, repeatability is improved also

PI is the leading manufacturer of Hexapod high-performance micro- and nanopositioning systems. These parallel-kinematics devices, in a number of different forms, are suitable for diverse applications, ranging from handling systems in electronics fabrication and tool control in precision machining, through medical technology, to optical systems like those found in space telescopes and satellite receiving antennas. Various models of the powerful parallel kinematic machines (PKM) can move masses of 50, 200 or even 1000 kilograms with micron accuracy as required in their respective applications.

These Hexapod systems are all built with six, high-resolution electro-mechanical or piezoelectric actuators all acting on a common platform. It is the familiar flight simulator design, but considerably more precise: in place of hydraulic cylinders, the Hexapods are driven by highly accurate, precision-controlled rotary or linear motors. Different drive principles are employed, depending on the application: Hexapods with NEXLINE® drives make for a positioning system which is not only vacuum compatible but also completely non-magnetic, p. 15.

All PI Hexapod systems include a sophisticated, yet easy to use controller. The Hexapod controller allows the user to set a pivot point anywhere inside or outside the Hexapod working space, by a simple software command. This freely definable pivot point stays with the platform, no matter how it moves—an invaluable feature for example in optics applications. Moves are specified in Cartesian coordinates and the PC-based controller transforms them into the required motion-vectors for the individual actuator drives. The latest controller generation features flexible interfaces: high-speed RS-232, or TCP/IP interface for remote / network / Internet addressing.

Advantages of PKM:

- Low moved mass, lower inertia
- Better dynamic behaviour, shorter settling times
- Smaller package size
- Higher stiffness
- No accumulation of position errors, increased accuracy
- Freely definable pivot point
- Reduced runout errors
- No moving cables: better repeatability

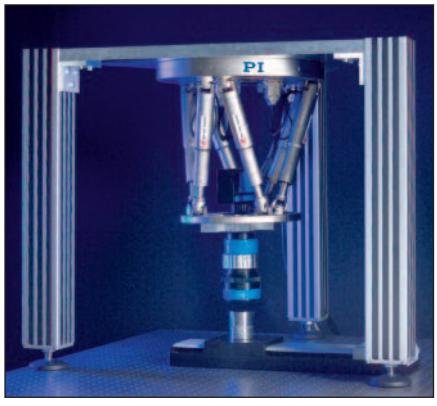

This automated interferometric inspection system allows optical mold inserts to be checked directly while still on the production line. The hexapod is mounted "upside down" on a 20-millimeter-thick aluminum plate with the interferometer positioned in the central core of the hexapod, where it does interfere with the motion. Control is integrated into a MatLab program, which also handles the metrological image processing (photo: Physik Instrumente (PI) / Fraunhofer Institute for Production Technology IPT

M-810.0A Miniature Hexapod 6-Axis Robot

The M-810 miniature Hexapod is now available with a modified cable exit. This makes for even more compact integration

- **Most-Compact Hexapod in the PI Portfolio**
- **Travel Ranges 40 x 40 x 13 mm, Rotation to 60 Degrees**
- **Clear Aperture Ø 59 mm**
- **Load Capacity to 5 kg**
- **Resolution of a Single Strut 40 Nm**
- **Min. Incremental Motion to 200 Nm**
- **Repeatability up to ±0.5 µm**
- **Velocity to 10 mm/s**

Model	Load capacity	Travel range X / Y / Z	Travel range θ_x / θ_y / θ_z	Max. velocity	Dimensions
M-810.00	5 kg	±20 mm ±20 mm ±6,5 mm	±11° ±11° ±30°	10 mm/s	Outer Ø 100 mm height 118 mm

M-850K Vacuum Hexapod 6-Axis Robot

Parallel-Kinematics System for Wide Temperature Ranges

This custom hexapod was designed to work in a thermo-vacuum chamber

- **6 Degrees of Freedom, Works in Any Orientation**
- **Vacuum Compatible up to 10^{-6} hPa**
- **200 kg Load Capacity (Vertical)**
- **Repeatability to ±1 µm**
- **Encoder Resolution to 5 nm**

Model	Operating temperature range	Storage temperature	Travel ranges	Dimensions
M-850KTVH Vacuum Hexapod	-10 bis +25 °C	-20 bis +40 °C	±50 mm (X,Y), ±25 mm (Z) ±15° (θ_X, θ_Y), ±30° (θ_Z)	Ø 350 mm 330 mm height

M-850K Weatherproof Hexapod 6-Axis Robot

Ultra-High-Precision Hexapod for Outdoor Operation

This customer-specific M-850KWAH Hexapod can operate outdoors at altitudes up to 5000 m

- **Load Capacity to 750 N**
- **Unidirectional Repeatability to 5 µm**
- **Clear Aperture Ø 420 mm**
- **Long Lifetime: 2 Million Cycles**
- **Drive: Brushless Motors**
- **Correspond to protection class IP 64**
- **Corrosion Protection**

Model	Travel Range X / Y / Z	Max. load capacity	Mass	Dimensions
M-850KWAH Weatherproof Hexapod	±10 / ±11 / ±16 mm	750 N	46 kg	Outer Ø 580 mm height 357 mm

M-850K Ultra-High-Load Hexapod 6-Axis Robot

Precise Hexapod for Ultra-High Loads up to 1 Ton

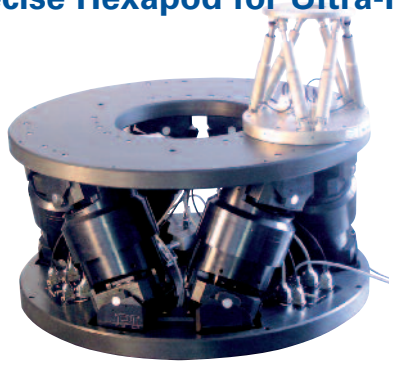

The vaccum compatible Hexapod M-850KHLH provides six degrees of freedom for loads up to 1 t, here with a standard M-840 hexapod for size comparison

- **Six Degrees of Freedom**
- **Max. Load Capacity to 1000 kg**
- **Repeatability to 2 µm**
- **Drive: Brushless Motors with Brake**
- **Vacuum Compatible up to 10^{-6} hPa**

Model	Travel range X / Y / Z	Rotation range θ_x / θ_y / θ_z	Max. velocity X/Y/Z	Dimensions
M-850KHLH	±12 mm	±3° / ±3° / ±4°	0.5 mm/s	Ø outside 1 m height 0.5 m

M-850K Large-Aperture High-Load Hexapod 6-Axis Robot

6-Axis Precision Positioning & Alignment System for Inspection Systems

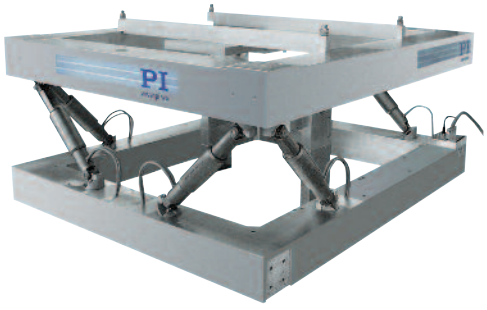

Dimensions of 100 x 84 x 40 cm and a load capacity of up to 200 kg makes this custom Hexapod system suitable for all kinds of fine-positioning tasks, as in TV-screen inspection

- **200 kg Load Capacity (Vertical)**
- **Very Large Aperture (640 x 820 mm)**
- **Six Degrees of Freedom**
- **No Moving Cables for Improved Reliability and Precision**
- **Parallel-Kinematics Design—Significantly Smaller and Stiffer than Serial-Kinematics Systems, Better Dynamics**
- **Virtual Pivot Point**
- **Sophisticated Controller Using Vector Algorithms Included**

Model	Max. load base-plate horizontal optional)	Travel range X / Z / Z	Travel range θ_x / θ_y / θ_z	Typ. velocity	Dimensions
M-850KLAH Large Hexapod	200 / 50 kg	±25 mm	±5°	2 mm/s lin. 25 mrad/s rot.	100 x 84 x 40 cm

M-850K Ultra-High Load Hexapod 6-Axis Robot

6-Axes, Long Travel, Micron Precision, 1 Ton in Any Orientation

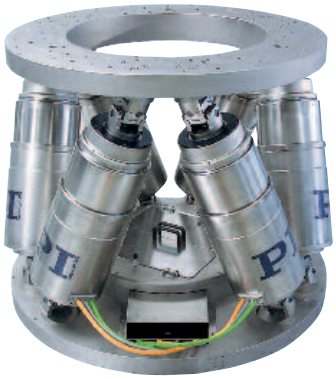

This custom parallel-kinematics system positions loads up to one ton in any orientation with micron accuracy

- **Load Capacity to 1000 kg in Any Orientation**
- **Six Degrees of Freedom**
- **Travel Ranges to ±200 mm, to ±20°**
- **Resolution to 0.8 µm, to 0.5 µrad**
- **Drive: Brushless Motors with Brake**
- **Sophisticated Controller Using Vector Algorithms**

Model	Travel ranges	Push/ pull force	Max. velocity	Unidirectional Repeatability	Dimensions
M-850KHTH High-Load Hexapod with Long Travel Range	±200 mm (X, Y), ±100 mm (Z) ±20° (θ_X, θ_Y), ±5° (θ_Z)	10,000 N	1 mm/s	±1 µm; ±3 µrad	Baseplate: 900 mm Ø Upper platform: 800 mm Ø height 714 mm aperture: Ø 500 mm

M-810 Miniature Hexapod 6-Axis Robot

6 Degrees of Freedom & High Precision in a Small Package

The miniature Hexapod M-810 provides long travel ranges despite its compact design

- **Most-Compact Hexapod in the PI Portfolio**
- **Travel Ranges 40 x 40 x 13 mm, Rotation to 60 Degrees**
- **Load Capacity to 5 kg**
- **Resolution of a Single Strut 40 nm**
- **Min. Incremental Motion to 200 nm**
- **Repeatability up to ±0.5 µm**
- **Velocity to 10 mm/s**

With a platform diameter of only 10 cm the M-810 Hexapod is the most compact parallel-kinematics micropositioning system to date. In addition to positioning all six axes with high speed and accuracy, it allows the user to define the center of rotation (pivot point) anywhere inside or outside the system envelope by one simple software command. This makes it ideal for all complex positioning tasks with restricted space.

Application Examples

- Biotechnology
- Semiconductor technology
- Micromachining
- Micromanipulation
- X-ray diffraction measurements
- Tool control

Ordering Information

M-810.00
Miniature-Hexapod Microrobot with Controller, Direct Drive

Ask about custom designs

Extremely Compact, Great Freedom of Motion

The M-810.00 with its direct-drive torque motors and ActiveDrive™ system with integrated servo ampifiers provides an increased velocity of up to 10 mm/s for loads up to 5 kg. Small and compact, the Hexapod allows a large stroke of up to 40 mm (linear) and 60° (angular).

Hexapod vs. Serial Kinematics Systems

The Hexapod is driven by six high-resolution actuators all connected directly to the same moving platform. This design provides a high system stiffness and a large clear aperture.

Because of the low mass of the moving platform, positioning operations can be performed with far lower settling times than with conventional,

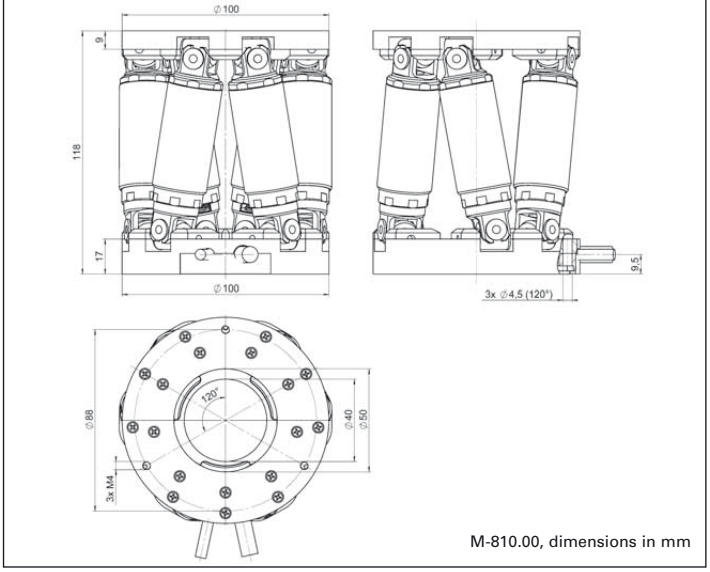

M-810.00, dimensions in mm

stacked multi-axis systems. In such systems, runout, guiding errors, and the friction and inertia of moving cables all accumulate to limit accuracy and repeatability-problems which do not affect parallel kinematic systems like the Hexapod.

User-Defined Pivot Point

For optics and other alignment tasks, it is important to be able to define a fixed pivot point. The sophisticated Hexapod-controller allows choosing any point in space as the pivot point for the rotation axes with a simple software command. The pivot point remains fixed relative to the platform.

Target positions in 6-space are entered in user-friendly coordinates and reached by smooth vectorized motion.

Open Architecture

Control of the hexapod is facilitated by the controller's open interface architecture, which provides a variety of high-level commands and includes a macro language for programming and storing command sequences.

Technical Data

	M-810.00	Unit
Active axes	X, Y, Z, ΘX, ΘY, ΘZ	
Motion and positioning		
*Travel range X, Y	±20	mm
*Travel range Z	±6.5	mm
*Travel range ΘX, ΘY	±11	°
*Travel range ΘZ	±30	°
Actor drive	Brushless DC Motor, ActiveDrive™	
Actuator stroke	±7.5	mm
Single-actuator design resolution	0.04	µm
Integrated sensor	Rotary encoder	
Sensor resolution	12800	Cts./rev.
**Min. incremental motion X, Y	1	µm
**Min. incremental motion Z	0.2	µm
**Min. incremental motion ΘX, ΘY, ΘZ	3.5	µrad
Repeatability X, Y	±2	µm
Repeatability Z	±0.5	µm
Repeatability ΘX, ΘY, ΘZ	±5	µrad
Backlash X, Y	2	µm
Backlash Z	0.5	µm
Max. velocity X, Y, Z	10	mm/s
Max. velocity ΘX, ΘY, ΘZ	250	mrad/s
Typ. velocity X, Y, Z	5	mm/s
Typ. velocity ΘX, ΘY, ΘZ	120	mrad/s
Mechanical properties		
Stiffness X, Y	0.1	N/µm
Stiffness Z	4	N/µm
Max. load (baseplate horizontal / optional)	5 / 2.5	kg
Miscellaneous		
Operating temperature range	0 to +50	°C
Material	Stainless steel, aluminum	
Mass	1.7	kg
Controller		
Operating Voltage	100–240 VAC, 50/60 Hz	

* The travel ranges of the individual coordinates (X, Y, Z, ΘX, ΘY, ΘZ) are interdependent. The data for each axis in this table shows its maximum travel, where all other axes are at their zero positions. If the other linear or rotational coordinates are not zero, the available travel may be less.

** Six-axis move. No moving cables (unlike serial-kinematic stacked systems). Eliminates bending, inertia and friction, improving accuracy.

Technical data are specified at 20 ±3°C. Data for vacuum versions may differ.

M-850 Hexapod 6-Axis Robot

High-Load Parallel-Kinematics Micropositioner with Controller, to 2000 N


M-850 Hexapod Microrobot

- **Six Degrees of Freedom**
- **Works in Any Orientation**
- **No Moving Cables for Improved Reliability and Precision**
- **200 kg Load Capacity (Vertical)**
- **Heavy-Duty, Ultra-High-Resolution Bearings for 24/7 Applications**
- **Repeatability to ±1 µm**
- **Encoder Resolution to 0.005 µm**
- **Significantly Smaller and Stiffer than Serial-Kinematics Systems, Better Dynamics**
- **Vacuum-Compatible Versions Available**
- **Linear and Rotary Multi-Axis Scans**
- **Virtual Pivot Point**
- **Sophisticated Controller Using Vector Algorithms**
- **MTBF 20,000 h**

Application Examples

- Alignment of secondary mirrors
- Semiconductor technology
- Optics alignment
- Medical technology
- Micromachining
- Micromanipulation
- X-ray diffraction measurements
- Satellite testing equipment
- Tool control

The M-850 is the ideal micropositioning system for all complex positioning tasks which depend upon high load capacity and accuracy in six independent axes. The use of extremely stiff and accurate components for the M-850 Hexapod results in an unusually high natural frequency of 500 Hz with a 10 kg load. It can withstand loads of 200 kg vertically, and at least 50 kg in any direction. In addition to positioning all axes with resolutions in the submicron and arcsecond ranges, it allows the user to define the center of rotation (pivot point) anywhere inside or outside the system envelope by one simple software command.

Two models are available: The M-850.50 featuring higher speed and direct-drive actuators, and the M-850.11 with a gear ratio that makes it self-locking even with large loads.

Hexapod vs. Serial Kinematics Systems

The Hexapod is driven by six high-resolution actuators all connected directly to the same moving platform. This design provides a high system stiffness and a large clear aperture.

Because of the low mass of the moving platform, positioning operations can be performed with far lower settling times than with conventional, stacked multi-axis systems. In such systems, runout, guiding errors, and the friction and inertia of moving cables all accumulate to limit accuracy and repeatability—problems which do not affect parallel kinematic systems like the Hexapod.

Fixed Virtual Pivot Point

For optics and other alignment tasks, it is important to be able to define a fixed pivot point. The sophisticated Hexapod controller allows choosing any point in space as the pivot point for the rotation axes by software command. The pivot point remains fixed relative to the platform.

Target positions in 6-space are entered in user-friendly coordinates and reached by smooth vectorized motion.

Open Architecture

Control of the hexapod is facilitated by the controller´s open interface architecture, which provides a variety of high-level commands and includes a macro language for programming and storing command sequences.

Automatic Optical Alignment

With the internal or external photometer option and the integrated scanning routines, just a few commands are needed to perform an automated alignment of optical components. For more information on photometers / optical power meters, see www.pi.ws.

A smaller, even-more-precise hexapod, specially developed for alignment of collimators, fiber bundles and I/O chips, is available as the F-206 (see p. 10).

Ordering Information

M-850.11
Hexapod Microrobot with Controller, DC-Motor w/ Gearhead

M-850.V11
Hexapod Microrobot with Controller, DC-Motor w/ Gearhead, Vacuum Compatible to 10^{-6} hPa

M-850.50
Hexapod Microrobot with Controller, Direct Drive

M-850.V50
Hexapod Microrobot with Controller, Direct Drive, Vacuum Compatible to 10^{-6} hPa

Optional Photometers

F-206.iiU
Photometer Card, IR Range, 2 Channels

F-206.VVU
Photometer Card, Visual Range, 2 Channels

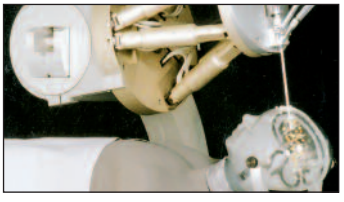
Custom Hexapod designed for neurosurgery Photo: IPA

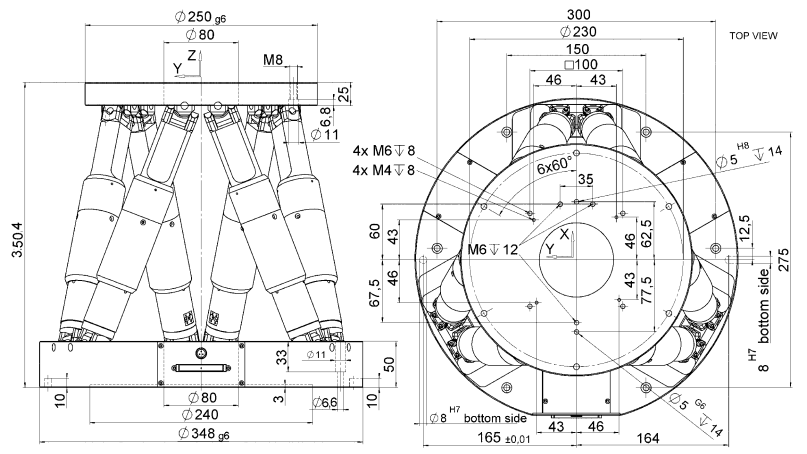

M-850 Hexapod. Dimensions in mm

Technical Data

Model	M-850.11	M-850.50	Units
Active axes	X, Y, Z, θ_X, θ_Y, θ_Z	X, Y, Z, θ_X, θ_Y, θ_Z	
Motion and positioning			
*Travel range X, Y	±50	±50	mm
*Travel range Z	±25	±25	mm
*Travel range θ_X, θ_Y	±15	±15	°
*Travel range θ_Z	±30	±30	°
Actuator drive	DC-motor	DC-motor	
Actuator stroke	±25	±25	mm
Integrated sensor	Rotary encoder	Rotary encoder	
Sensor resolution	2048	2048	
Actuator design resolution	0.005	0.05	µm
**Min. incremental motion X, Y, Z	1 (XY), 0.5 (Z)	1 (XY), 0.5 (Z)	µm (6-axis move!)
**Min. incremental motion θ_X, θ_Y, θ_Z	5	5	µrad (6-axis move!)
Repeatability X, Y	±2	±2	µm
Repeatability Z	±1	±1	µm
Repeatability θ_X, θ_Y, θ_Z	±10	±10	µrad
Max. velocity X, Y, Z	0.5	8	mm/s
Max. velocity θ_X, θ_Y, θ_Z	6	100	mrad/s
Typ. velocity X, Y, Z	0.3	5	mm/s
Typ. velocity θ_X, θ_Y, θ_Z	3	50	mrad/s
Mechanical properties			
Stiffness (k_x, k_y)	3	3	N/µm
Stiffness (k_z)	100	100	N/µm
Max. load (baseplate horizontal/any orientation)	200 / 50	200 / 50	kg
Max. holding force (baseplate horizontal/any orientation)	2000 / 500	250 / 85	N
Resonant frequency*** F_X,F_Y	90	90	Hz
Resonant frequency*** F_Z	500	500	Hz
Miscellaneous			
Operating temperature range	-10 to +50	-10 to +50	°C
Material	Aluminum	Aluminum	
Mass	17	17	kg
Controller			
Controller included	M-850.502	M-850.502	
Operating voltage	100–240 VAC, 50/60 Hz	100–240 VAC, 50/60 Hz	

Technical data are specified at 20 ±3 °C. Data for vacuum versions may differ.

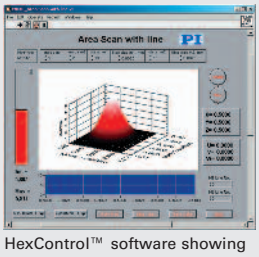

HexControl™ software showing scan of a fiber optics component

*The max. travel of the several coordinates (X, Y, Z, θ_X, θ_Y, θ_Z) are interdependent. The data for each axis in this table shows its maximum travel, where all other axes are at their zero positions. If the other linear or rotational coordinates are not zero, the available travel may be less.

**Six-axis move. No moving cables (unlike serial-kinematic stacked systems) to introduce bending forces, torque and friction which degrade positioning accuracy.
Example: The following position is in the workspace:
X: +20 mm θ_X : +10°
Y: +20 mm θ_Y : +10°
Z: +5 mm θ_Z : -2°

***Baseplate mounted horizontally with 10 kg load

M-840 HexaLight™ 6-Axis Robot

High-Speed Parallel-Kinematics Micropositioner with Controller, to 50 mm/s

M-840 HexaLight™ 6D-Micropositioning System

- **Six Degrees of Freedom, Travel Ranges to 100 mm/ 60° Rapid Response**
- **No Moving Cables for Improved Reliability and Precision**
- **Load Capacity 10 kg, Self-Locking Version M-840.DG**
- **Velocity up to 50 mm/s**
- **Repeatability up to ±2 µm**
- **Encoder Resolution to 0.016 µm**
- **Significantly Smaller and Stiffer than Serial-Kinematics Systems, Better Dynamics**
- **Vacuum-Compatible Versions Available**
- **Virtual Pivot Point**
- **Sophisticated Controller Using Vector Algorithms**
- **MTBF 20,000 h**

The M-840 is the ideal Micropositioning System for all complex positioning tasks which depend upon high speed and accuracy in six independent axes.

Application Examples

- Biotechnology
- Semiconductor technology
- Micromachining
- Micromanipulation
- X-ray diffraction measurements
- Tool control

Faster Positioning in All Six Axes

In comparison with the M-850 Hexapod (see p. 4 *ff*) the M-840 is designed for higher speeds and lighter loads. Loads of up to 10 kg can be positioned at up to 50 mm/s and 600 mrad/s with micron accuracy. In addition to positioning all axes, it allows the user to define the center of rotation (pivot point) anywhere inside or outside the system envelope by one simple software command.

Two models are available: The M-840.5PD featuring higher speed and direct-drive actuators, and the M-840.5DG with a gear ratio that makes it self-locking.

Hexapod vs. Serial Kinematics Systems

The Hexapod is driven by six high-resolution actuators all connected directly to the same moving platform. This design provides a high system stiffness and a large clear aperture.

Because of the low mass of the moving platform, positioning operations can be performed with far lower settling times than with conventional, stacked multi-axis systems. In such systems, runout, guiding errors, and the friction and inertia of moving cables all accumulate to limit accuracy and repeatability—problems which do not affect parallel kinematic systems like the Hexapod.

Fixed Virtual Pivot Point

For optics and other alignment tasks, it is important to be able to define a fixed pivot point. The sophisticated Hexapod controller allows choosing any point in space as the pivot point for the rotation axes by software command. The pivot point remains fixed relative to the platform.

Target positions in 6-space are entered in user-friendly coordinates and reached by smooth vectorized motion.

Open Architecture

Control of the hexapod is facilitated by the controller´s open

Ordering Information

M-840.5PD
Hexapod 6-Axis Parallel Kinematics Microrobot with Controller, Direct Drive

M-840.5DG
Hexapod 6-Axis Parallel Kinematics Microrobot with Controller, Gearhead Drive

Optional Photometer

F-206.iiU
Photometer Card, IR Range, 2 Channels

F-206.VVU
Photometer Card, Visible Range, 2 Channels

F-361.10
NIST Traceable Optical Power Meter, 1000 to 1600 nm

Ask about custom designs!

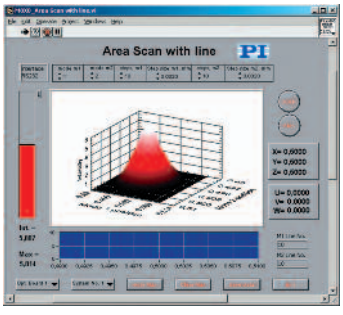

HexControl™ software showing scan of a fiber optics component

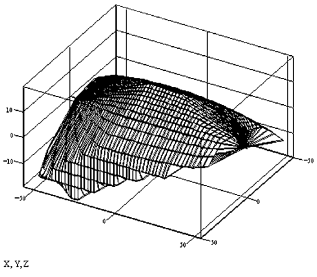

The X, Y, Z working space of the M-840 with $\theta_X = \theta_Y = \theta_Z = 5°$

interface architecture, which provides a variety of high-level commands and includes a macro language for programming and storing command sequences.

Automatic Optical Alignment

With the internal or external photometer option and the integrated scanning routines, just a few commands are needed to perform an automated alignment of optical components. For more information on photometers / optical power meters, see www.pi.ws.

A smaller, even-more-precise hexapod, specially developed for alignment of collimators, fiber bundles and I/O chips, is available as the F-206 see p. 10 *ff.*

For a compact, vacuum-compatible Hexapod see M-824 see p. 8 *ff.*

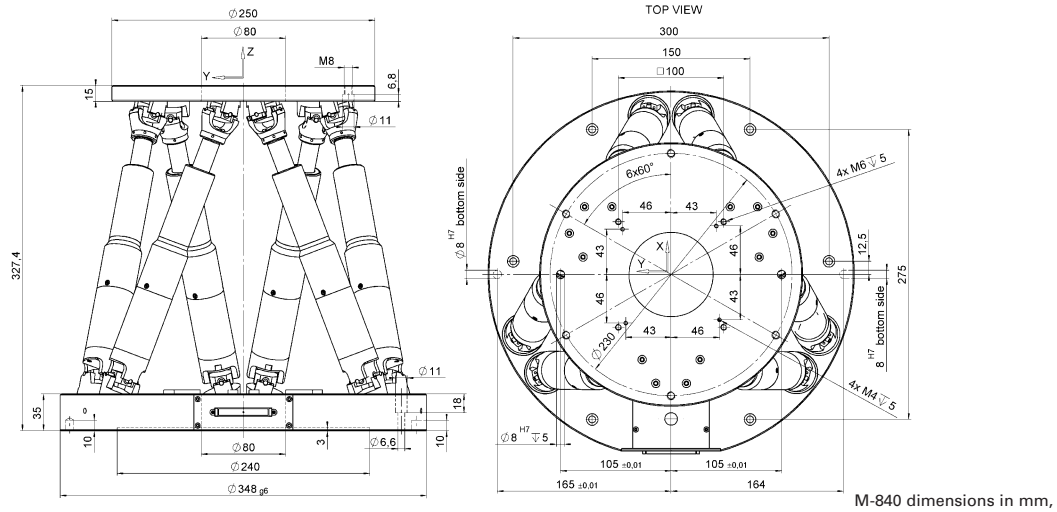

M-840 dimensions in mm, 3 m cable

Hexapodcontroller with optional display and keyboard

High-Speed Photometer F-361

Technical Data

Model	M-840.5PD	M-840.5DG	Units
Active axes	X, Y, Z, θ_X, θ_Y, θ_Z	X, Y, Z, θ_X, θ_Y, θ_Z	
Motion and positioning			
*Travel range X, Y,	±50	±50	mm
*Travel range Z	±25	±25	mm
*Travel range θ_X, θ_Y,	±15	±15	°
*Travel range θ_Z	±30	±30	°
Actuator drive	DC-motor	DC-motor	
Actuator stroke	±25	±25	mm
Integrated sensor	Rotary encoder	Rotary encoder	
Sensor resolution	2048	2048	
Actuator design resolution	0.5	0.017	µm
**Min. incremental motion X, Y	3	1	µm
**Min. incremental motion Z	1	0.5	µm
**Min. incremental motion θ_X, θ_Y, θ_Z	5	5	µrad
Repeatability X, Y	±2	±2	µm
Repeatability Z	±1	±1	µm
Repeatability θ_X, θ_Y, θ_Z	±20	±20	µrad
Max. velocity X, Y, Z	50	2.5	mm/s
Max. velocity θ_X, θ_Y, θ_Z	600	30	mrad/s
Typ. velocity X, Y, Z	30	2	mm/s
Typ. velocity θ_X, θ_Y, θ_Z	300	20	mrad/s
Mechanical properties			
Max. load (baseplate horizontal/any orientation)	10 / 3	10 / 3	kg
Max. holding force (baseplate horizontal/any orientation)	15 / 5	100 / 25	N
Resonant frequency*** F_X, F_Y	100	100	Hz
Resonant frequency*** F_Z	300	300	Hz
Miscellaneous			
Operating temperature range	-10 to +50	-10 to +50	°C
Material	Aluminum	Aluminum	
Mass	12	12	kg
Controller			
Delivered controller	M-850.502	M-850.502	
Operating voltage	100–240 VAC, 50/60 Hz	100–240 VAC, 50/60 Hz	

Technical data are specified at 20 ±3 °C. Data for vacuum versions may differ.

*The max. travel of the several coordinates (X, Y, Z, θ_X, θ_Y, θ_Z) are interdependent. The data for each axis in this table shows its maximum travel, where all other axes are at their zero positions. If the other linear or rotational coordinates are not zero, the available travel may be less.

**Six-axis move. No moving cables (unlike serial-kinematic stacked systems) to introduce bending forces, torque and friction which degrade positioning accuracy.

***Baseplate mounted horizontally without load

M-824 Compact 6-Axis-Robot

Precision Parallel-Kinematics Micropositioner with Controller, Vacuum Versions

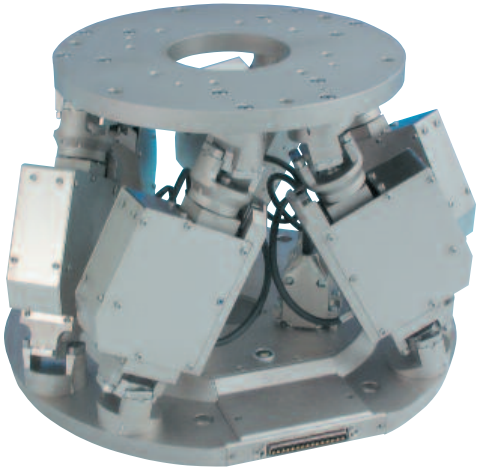

M-824.3DG compact 6-axis Hexapod

- **Extremely Compact**
- **Travel Ranges to 45 mm (linear), 25° (rotation)**
- **Load Capacity to 10 kg, Self Locking Version**
- **Resolution to 7 nm**
- **Min. Incremental Motion to 300 nm**
- **Repeatability ±0.5 µm**
- **Velocity to 25 mm/sec**
- **Vacuum-Compatible Versions Available**

The M-824 is the ideal micropositioning system for all complex positioning tasks which depend on high speed and accuracy in six independent axes. In addition to positioning all axes, it allows the user to define a center of rotation (pivot point) anywhere inside or outside the system envelope by one simple software command.

Application Examples

- Biotechnology
- Semiconductor technology
- Micromachining
- Micromanipulation
- X-ray diffraction measurements
- Tool control

Extremely Compact, Two Motor Versions

The M-824 uses a very compact drive with motor and spindle mounted side-by-side and, with a height of 188 mm, has a considerably lower profile than either the M-850, page 4-6, or M-840, page 4-8 Hexapods. Two versions featuring different drives are offered: the self-locking M-824.3DG with DC motor and gearhead can position loads of up to 5 kg in any orientation (10 kg with baseplate horizontal) with sub-micron precision. The M-824.3PD with integrated ActiveDrive™ system provides a significantly higher velocity of up to 25 mm/sec with loads up to 5 kg.

Hexapod vs. Serial Kinematics Systems

The Hexapod is driven by six high-resolution actuators all connected directly to the same moving platform. This design provides a high system stiffness and a large clear aperture.

Because of the low mass of the moving platform, positioning operations can be performed with far lower settling times than with conventional, stacked multi-axis systems. In such systems, runout, guiding errors, and the friction and inertia of moving cables all accumulate to limit accuracy and repeatability—problems which do not affect parallel kinematic systems like the Hexapod.

Fixed Virtual Pivot Point

For optics and other alignment tasks, it is important to be able to define a fixed pivot point. The sophisticated Hexapod controller allows choosing any point in space as the pivot point for the rotation axes by software command. The pivot point remains fixed relative to the platform.
Target positions in 6-space are entered in user-friendly coordinates and reached by smooth vectorized motion.

Open Architecture

Control of the hexapod is facilitated by the controller's open

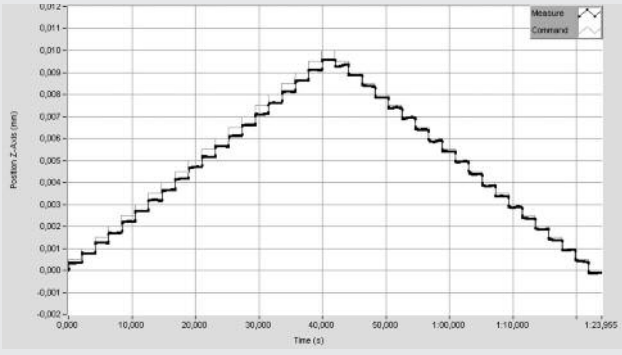

Interferometer tests show the high repeatability, here with 500 nm steps

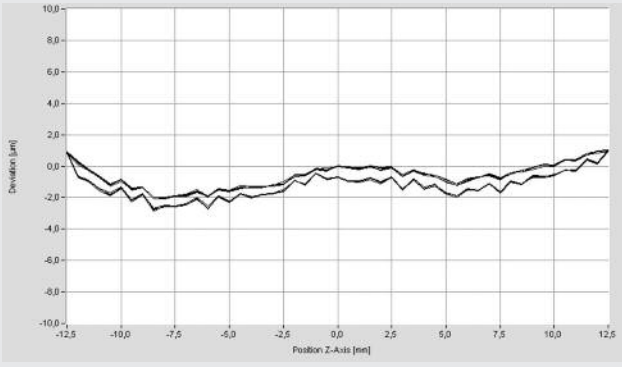

The interferometer test shows the Z axis accuracy over the entire travel range of 25 mm and the extremely high repeatability of ±0.046 µm

interface architecture, which provides a variety of high-level commands and includes a macro language for programming and storing command sequences.

Vacuum Versions

Both models are available as vacuum versions that enable use in applications such as X-ray diffraction microscopy with ambient pressures down to 10^{-6} hPa.

The M-824 comes with a powerful 6D controller and sophisticated, user-friendly positioning and alignment sofware. Keypad and display are optional

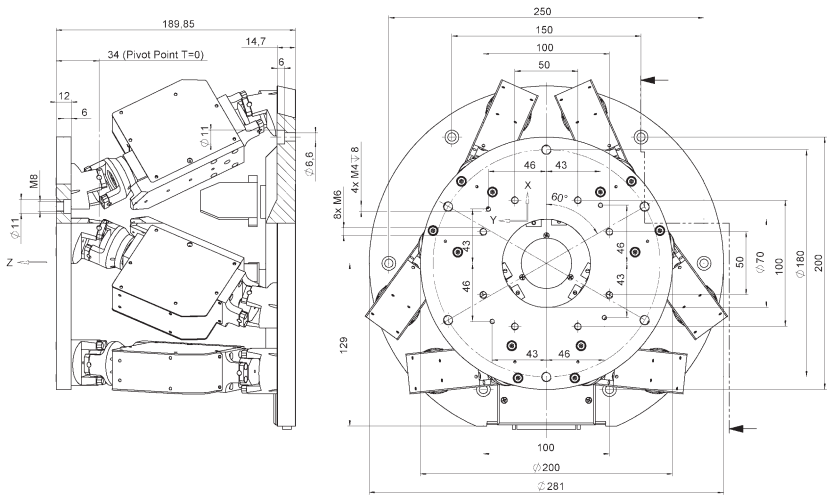

M-824 dimensions in mm, 3 m cable included

Technical Data

Model	M-824.3DG	M-824.3PD	Units
Active axes	X, Y, Z, θ_X, θ_Y, θ_Z	X, Y, Z, θ_X, θ_Y, θ_Z	
Motion and positioning			
*Travel range X, Y	±22.5	±22.5	mm
*Travel range Z	±12.5	±12.5	mm
*Travel range θ_X, θ_Y	±7.5	±7.5	°
*Travel range θ_Z	±12.5	±12.5	°
Single-actuator drive	DC-motor, gearhead	ActiveDrive™ DC Motor	
Actuator stroke	±12.5	±12.5	mm
Single-actuator design resolution	0.007	0.5	µm
Integrated sensor	Rotary encoder	Rotary encoder	
Sensor resolution	2048	2048	cts./rev.
**Min. incremental motion X, Y, Z	0.3	1	µm
**Min. incremental motion θ_X, θ_Y, θ_Z	3.5	12	µrad
Repeatability X, Y, Z	±0.5	±0.5	µm
Repeatability θ_X, θ_Y, θ_Z	±6	±6	µrad
Max. velocity X, Y, Z	1	25	mm/s
Max. velocity θ_X, θ_Y, θ_Z	11	270	mrad/s
Typ. velocity X, Y, Z	0.5	10	mm/s
Typ. velocity θ_X, θ_Y, θ_Z	5.5	55	mrad/s
Mechanical properties			
*Stiffness X, Y	1.7	1.7	N/µm
Stiffness Z	7	7	N/µm
Load capacity (baseplate horizontal/any orientation)	10/5***	5/2.5	kg
Miscellaneous			
Operating temperature range	-10 to +50	-10 to +50	°C
Material	Aluminum	Aluminum	
Mass	8	8	kg
Controller			
Controller included	M-850.502	M-850.502	
Operating voltage	100–240 VAC, 50/60 Hz	100–240 VAC, 50/60 Hz	

*The travel ranges of the individual coordinates (X, Y, Z, θ_X, θ_Y, θ_Z) are interdependent.
The data for each axis in this table shows its maximum travel, where all other axes are at their zero positions. If the other linear or rotational coordinates are not zero, the available travel may be less

**Simultaneous motion of all 6 actuators! No moving cables (as in serial-kinematics stacked systems) to introduce bending sources, torque and friction, which degrade positioning accuracy

***Self Locking

Technical data are specified at 20 ±3 °C.
Data for vacuum versions may differ.

F-206.S HexAlign™ 6 Axis-Robotics Alignment System

Parallel-Kinematics Precision Alignment System / Manipulator, with Controller

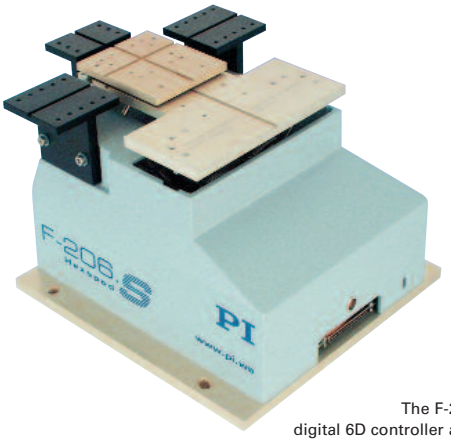

The F-206.S Hexapod comes with a digital 6D controller and comprehensive software

- **Parallel Kinematics with 6 Degrees of Freedom**
- **0.033 µm Actuator Resolution**
- **Repeatability 0.3 µm in Space**
- **No Moving Cables for Improved Reliability, Reduced Friction**
- **Better Dynamics, More Compact than Serial Kinematics Systems**
- **For Scanning and Alignment**
- **Cartesian Coordinate Control with Virtualized Pivot Point**
- **Powerful Digital Controller with Open Source LabVIEW Drivers, DLL Libraries...**
- **Integrated Fiber Alignment Routines**

The F-206.S HexAlign™ Hexapod is a highly accurate micropositioning system for complex multi-axis alignment tasks. It is based on PI's long experience with ultra-high-resolution, parallel kinematics stages. Unlike hexapods with variable-length struts ("legs") the F-206 features constant-length struts and friction-free flexure guides. This gives the F-206 even higher precision than other hexapod designs.

Application Examples

- Micromachining
- Photonics packaging
- Fiber alignment
- Semiconductor handling / test systems
- Micromanipulation (life science)
- Optical device testing
- Collimator and fiber bundle alignment
- MEMS positioning/alignment

Compact, Plug & Play

The F-206.S Hexapod is considerably smaller and more accurate than comparable serial kinematics six-axis systems (stacks of single-axis units).

The parallel kinematics of the F-206 is immune to the cumulative bending and guiding errors of the various axes which, together with the inertia and friction of the moving cables, can limit accuracy in stacked systems. In addition, rotations are not set in hardware, but about a pivot point freely definable in software. A high-performance controller does all necessary coordinate transformation for coordinating the six drives. Because all the actuators are attached directly to the same moving platform, there are none of the servo-tuning problems associated with the loading and inertia differences of the different axes, as are inherent in stacked systems.

Virtualized Pivot Point

It is important to have a fixed pivot point for alignment tasks, especially in photonics packaging. Because the parallel kinematics motion of the F-206 is calculated with complex algorithms in the digital controller, it was easy to allow programming any point in space as center of rotation. Furthermore, the cartesian coordinates of any position and any orientation can be entered directly and the specified target will be reached after travel along a smooth path.

Six Degrees of Freedom, No Moving Cables

In the F-206 parallel kinematics design, all cable terminations are on the stationary base, eliminating unpredictable friction and inertia, improving resolution and repeatability. Further advantages of the system are:

- No cable guides required
- Reduced Size and Inertia
- Improved Dynamic and Settling Behavior
- Identical Modular Actuators for Simplified Servicing

Open Command Set, Simplified Programming

Integration of the F-206 in complex applications is facilitated by the system's open command set and comprehensive tool libraries. The controller can be operated either through a host PC, or directly through a keyboard and monitor. It can also run programs stored in a user-friendly, fully documented macro language.

Automatic Optical Alignment

Optional internal and external photometers are available.

Ordering Information

F-206.S0
Hexapod 6-Axis Precision Alignment System / Manipulator with 6 DOF Hexapod Controller

F-206.SD
Hexapod 6-Axis Precision Alignment System / Manipulator with 6 DOF Hexapod Controller, Built-in Display and Keypad

Options and Accessories

F-206.AC8
Upgrade for 2 Additional Servo-Motor Control Channels on F-206 Controller

F-206.MHU
Force-Limiting Mounting Platform, (included with F-206.SD)

F-206.NCU
Upgrades: Rapid Nanopositioning Upgrade for F-206.S. Consists of P-611.3SF NanoCube and E-760 Controller Card

F-206.MC6
6D Interactive Manual Control Pad

F-206.VVU
2-Channel Photometer Card, (Visual Range)

F-206.iiU
2-Channel Photometer Card (IR Range)

F-361.10
Absolute-Measuring Optical Power Meter, 1000-1600 nm Wavelength

Additional Accessories, see www.pi.ws.

Both types are fully integrated with the controller hardware and with routines designed for automatic alignment of collimators, optical fibers and arrays. For more information on the photometers see www.pi.ws.

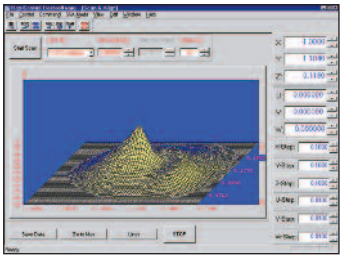

HexControl™ Software displaying scan of photonics component

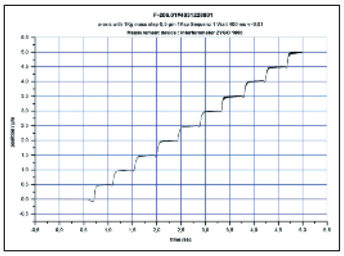

Interferometer test of an F-206.S system shows the excellent repeatability of small steps, here 0.5 µm spaced at 100 ms

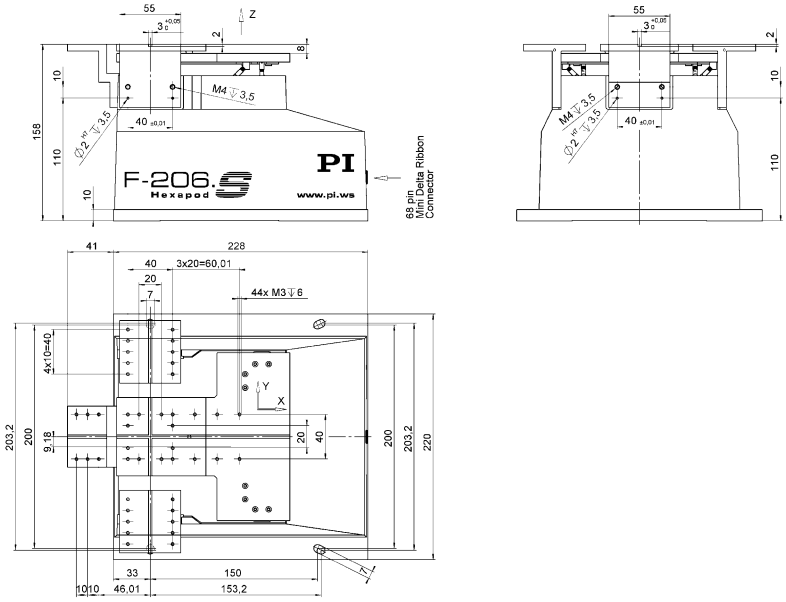

F-206.S. Dimensions in mm

Technical Data

Model	F-206.S0 / F-206.SD
Travel range X*	-8 to +5.7 mm
Travel range Y*	±5.7 mm
Travel range Z*	±6.7 mm
Travel range θ_X *	±5.7°
Travel range θ_Y *	±6.6°
Travel range θ_Z *	±5.5°
Actuator resolution	33 nm
Minimum incremental motion X, Y, Z**	0.1 µm (6-axis move!)
Minimum incremental motion θ_X, θ_Y, θ_Z**	2 µrad (0.400115°) (6-axis move!)
Bidirectional repeatability X, Y, Z	0.3 µm
Bidirectional repeatability θ_X, θ_Y, θ_Z	3.6 µrad
Speed X, Y, Z	0.01 to 10 mm/s
Maximum load in Z	2 kg (centered on platform)
Mass	5.8 kg
Controller	Digital Hexapod controller with optional photometer card and integrated scan and align routines
Operating voltage	100–240 VAC, 50/60 Hz
Software	LabVIEW drivers, software for alignment of arrays, DLL libraries, HexControl™, scan and align software, terminal software

*Travel ranges in the coordinate directions (X, Y, Z θ_X, θ_Y, θ_Z) are interdependent. The data given shows maximum travel range of the axis in question (i.e. its travel when all other axes are at their zero positions). If this is not the case, the available travel may be less.

**Six-axis move. No moving cables (unlike serial-kinematic stacked systems) to introduce bending forces, torque and friction which degrade positioning accuracy.

Non-Magnetic Piezo Hexapod 6-Axis Robot

6-Axis Precision Positioning System with NEXLINE® Linear Drives

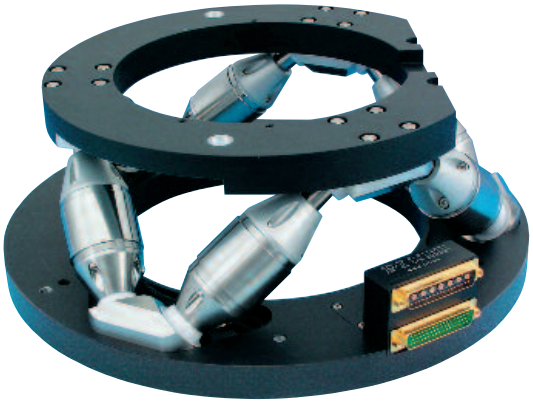

6-axis parallel kinematics (Hexapod) with integrated N-215 NEXLINE® high-load actuators, suitable for applications in strong magnetic fields

- **Travel Ranges 10 mm Linear, 6° Rotation**
- **Large Clear Aperture Ø 202 mm**
- **Non-Magnetic**
- **Nanometer Resolution**
- **Low-Profile: 140 mm Height Only**
- **Parallel Kinematics for Enhanced Dynamics and Better Multi-Axis Accuracy**
- **Up to 500 N Force Generation**
- **Self Locking at Rest, No Heat Generation**

Model	Travel Range	Load capacity	Dimensions
N-515KNPH NEXLINE® Piezo Hexapod	X, Y, Z: 10 mm θ_X, θ_Y, θ_Z: 6°	50 kg	Outer Ø baseplate, 380 mm Ø moved platform (top) 300 mm 140 mm height

Request or download the complete hardbound catalog
"Piezo Nano Positioning Inspirations"

Call or go to: http://www.pi.ws

Products and Technologies

- Nanopositioning / Scanning Stages
- Scanning Microscopy Stages
- Steering Mirrors, Mirror Shifters
- Piezo Actuators
- Piezo Motors
- Piezo Controllers
- Motorized Stages & Actuators
- Motor Controllers
- Hexapod 6-Axis Alignment Systems

Fields of Applications

- Biotechnology / Life Sciences
- Semiconductor Technology
- Data Storage Technology
- Nanotechnology
- Aeronautics
- Astronomy
- Adaptive Optics
- Metrology / Laser-Systems
- Precision Machining

Headquarters

GERMANY

Physik Instrumente (PI) GmbH & Co. KG
Auf der Römerstr. 1
76228 Karlsruhe/Palmbach
Tel: +49 (721) 4846-0
Fax: +49 (721) 4846-100
info@pi.ws · www.pi.ws

PI Ceramic GmbH
Lindenstr.
07589 Lederhose
Tel: +49 (36604) 882-0
Fax: +49 (36604) 882-25
info@piceramic.de
www.piceramic.de

Subsidiaries

USA (East) & CANADA

PI (Physik Instrumente) L.P.
16 Albert St.
Auburn, MA 01501
Tel: +1 (508) 832 3456
Fax: +1 (508) 832 0506
info@pi-usa.us
www.pi-usa.us

USA (West) & MEXICO

PI (Physik Instrumente) L.P.
5420 Trabuco Rd., Suite 100
Irvine, CA 92620
Tel: +1 (949) 679 9191
Fax: +1 (949) 679 9292
info@pi-usa.us
www.pi-usa.us

JAPAN

PI Japan Co., Ltd.
Akebono-cho 2-38-5
Tachikawa-shi
Tokyo 190
Tel: +81 (42) 526 7300
Fax: +81 (42) 526 7301
info@pi-japan.jp
www.pi-japan.jp

PI Japan Co., Ltd.
Hanahara Dai-ni Building, #703
4-11-27 Nishinakajima,
Yodogawa-ku, Osaka-shi
Osaka 532
Tel: +81 (6) 6304 5605
Fax: +81 (6) 6304 5606
info@pi-japan.jp
www.pi-japan.jp

CHINA

Physik Instrumente (PI Shanghai) Co., Ltd.
Building No. 7-301
Longdong Avenue 3000
201203 Shanghai, China
Tel: +86 (21) 687 900 08
Fax: +86 (21) 687 900 98
info@pi-china.cn
www.pi-china.cn

UK & IRELAND

PI (Physik Instrumente) Ltd.
Lambda House
Batford Mill
Harpenden, Hertfordshire
AL5 5BZ
Tel: +44 (1582) 711 650
Fax: +44 (1582) 712 084
uk@pi.ws
www.physikinstrumente.co.uk

FRANCE

PI France S.A.S.
32 rue Delizy
93694 Pantin Cedex
Tel: +33 (1) 57 14 07 10
Fax: +33 (1) 41 71 18 98
info@pifrance.fr
www.pifrance.fr

ITALY

Physik Instrumente (PI) S.r.l.
Via G. Marconi, 28
20091 Bresso (MI)
Tel: +39 (02) 665 011 01
Fax: +39 (02) 873 859 16
info@pionline.it
www.pionline.it